Davis Controls®
A breed above the rest

Magnetic Level Gauge

Accurate, Affordable, Adaptable and Reliable



SPECIFICATIONS

Omni-directional magnet system - guide free float
High pressure capability - up to 3000 PSIG unvented
High temp capability up to 400°C / 752°F
Standard SG range 0.5 - 2.2
Unlimited length
PP / PVC / PVDF / Fibreglass Versions

CRN

C SA US

MADE IN

FEATURES

- Eliminates preventive maintenance
- An economical alternative to conventional level gauges and other measuring systems
- Automatic float failure warning
- Edge magnetitized, coloured wafers
- Red flag colour (ideal for use in all applications)
- Anti-spin stops
- Large visual display
- Continuous control of liquid level
- No leakage to atmosphere
- Unlimited length
- Dual bridle design
- Valves and accessories
- Immediate and accurate response to level changes, providing clean and sharp legibility
- Particularly suitable for dangerous or toxic fluids
- Display can be rotated through 360° irrespective of float position

Davis Controls®
A breed above the rest

Magnetic Level Gauge

Accurate, Affordable, Adaptable and Reliable

CHAMBER

- Hydrostatically tested to 1.5 times the design pressure
- Fabricated from seamless pipe; full penetration welds
- Standard material is 304SS, 316SS, 321SS, Titanium and corrosion resistant plastic
- Special chamber materials, Alloy 825, Hastalloy B & C, Sanicro 28 (duplex), Monel and other materials available upon request
- Standard 2” schedule 10 or 40; 2-1/2” schedule 40 or 80. Optional 1-1/4” schedule 40 or 80 chamber available
- Flanges and other vessel connections are available in Stainless Steel or Carbon Steel depending on the application (standard 316L, or ASTM A105N)
- Standard vessel connections; Flanged 3/4”, 1”, 1-1/2” and 2” ANSI 150/300/600/900 lb.
- Drain and vent connections normally plugged 1/2” NPT
- Maximum single length 6m/20ft. between flanged joints
- Intermediate support standard for chambers over 3.5m/10ft.

OTHER OPTIONS

- Alternative Chamber & Float Materials
- Aluminum Display Housing
- Epoxy Coated Indicator Assembly
- Steam Heat Tracing
- NDE (Non-Destructive Exam) Test Reports
- General Arrangement Drawing
- Hydrostatic Test Reports
- Radiography

ACCESSORIES

- Isolation valve
- Graduated Scales *
- Non-Frost Block
- Insulation Jacket
- Support Brackets
- Single Point Switches *
- Continuous 4-20 mA Transmitter

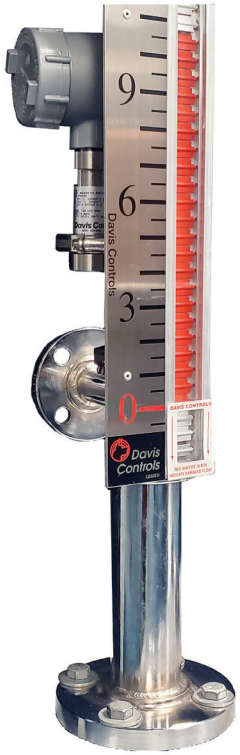

* Level Gauge with Single Point Switch and Graduated Scale

Davis Controls®
A breed above the rest

Magnetic Level Gauge

Accurate, Affordable, Adaptable and Reliable

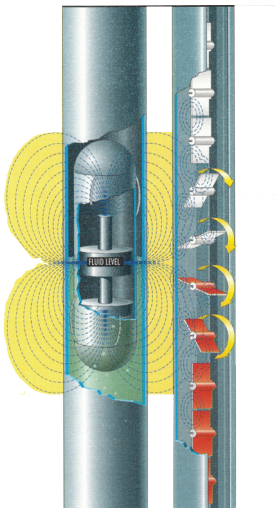

THE WELL PROVEN DAVIS MAGNETIC LEVEL GAUGE is particularly suited for use where dangerous and toxic liquids or gases are involved, also where leaks to atmosphere are not permitted, and where the danger of failure of standard gauge materials through stress or corrosion cannot be tolerated.

The magnetic gauge is designed so that the liquid being measured is enclosed within a sealed stainless steel chamber.

A stainless steel or titanium float fitted with a permanent magnet moves freely inside the chamber and actuates the magnetic wafers within the indicator, mounted on the outside of the chamber. As the float rises or falls with the liquid level, each wafer rotates 180° and presents a contrasting colour.

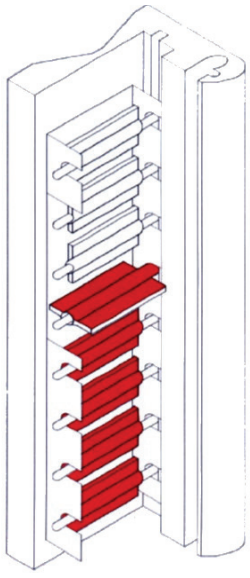

DISPLAY/INDICATORS

The Davis Controls wafer magnetization technique is protected by U.S.A, Canadian and UK patents. The unique system of 1” wide molded ferrite wafers, remains magnetically locked in vertical position until disturbed by the greater magnetic force of the float magnet. The magnetized wafers interlock with each other, eliminating the problems caused by vibrations. Other non-patented wafer designs can rotate randomly displaying incorrect or confusing visual level information.

Float failure is a potential problem with any magnetic level gauge. If leakage into the float occurs, or if sediment accumulates on top of the float, it will sink to the bottom. In all other designs, the floats sinking to the bottom of the chamber causes the display to indicate that the vessel is empty. Only the Davis design has an alarm indicator located at the bottom of the display which warns that the float has failed, not that the vessel is empty.

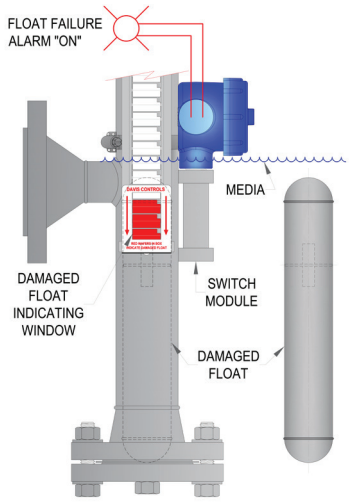

The Davis Controls design has the largest (1” wide) and easiest to read display on the market (red and white are standard but green and other colours are available). Research shows that red and white offer the best visual contrast while creating the least chance of washout caused by bright lighting or glare from the sun.

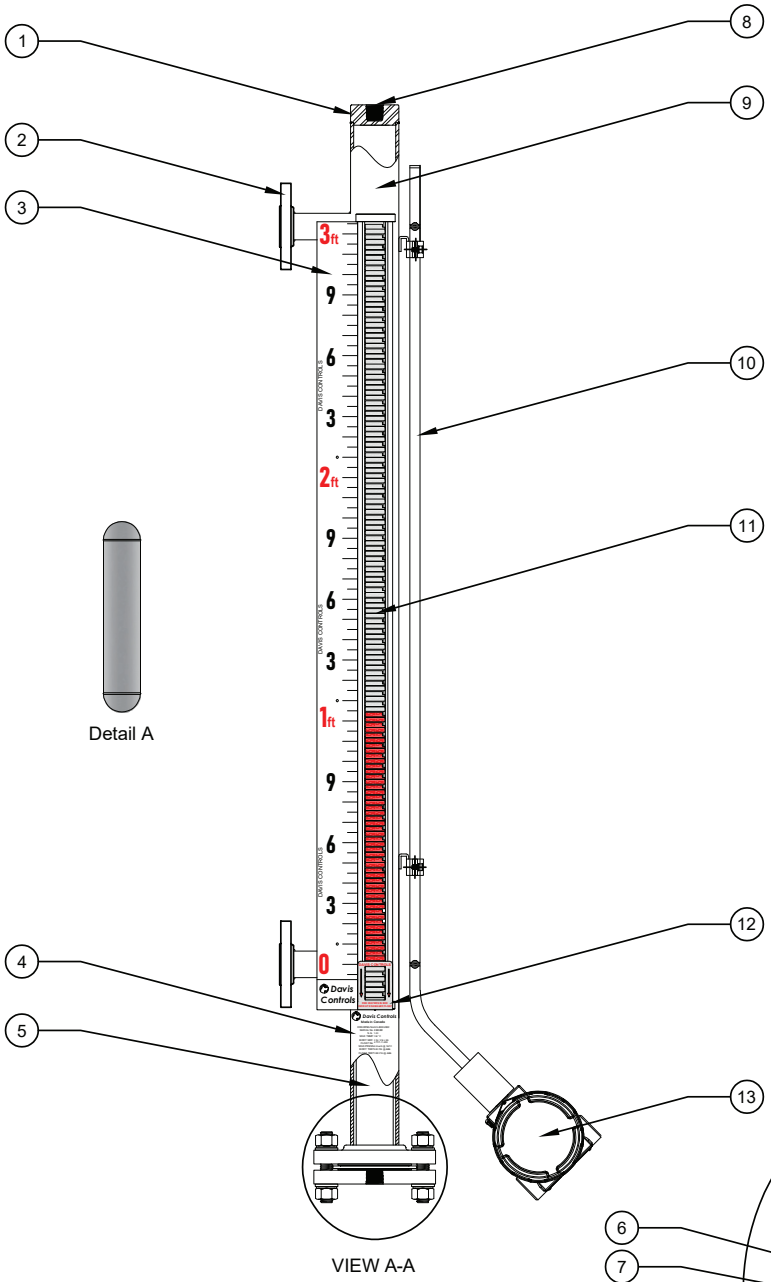

MLG Identification	
1	End Cap
2	Vessel Connection Flange
3	Graduated Scale
4	Name Plate
5	Float
6	Chamber Flange
7	Gasket
8	Vent
9	Chamber Body
10	Transmitter Stem
11	Indicator
12	Damaged Float Indicator
13	Transmitter Head
14	Blind Flange
15	Flange Hardware
16	Drain

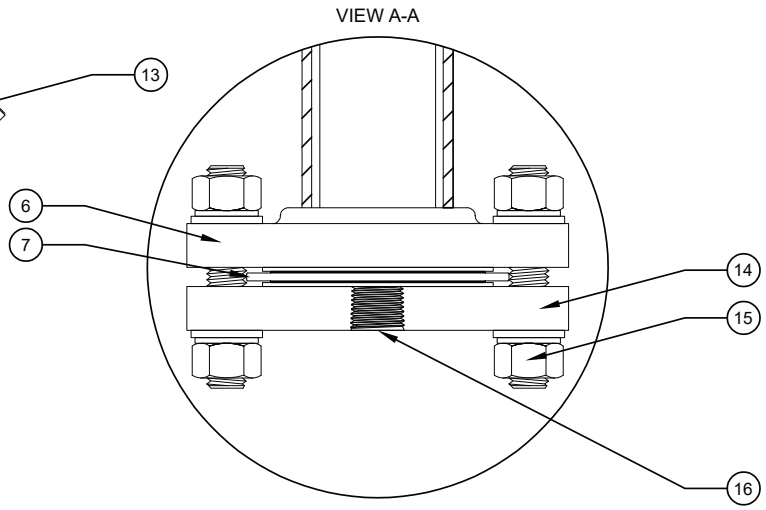

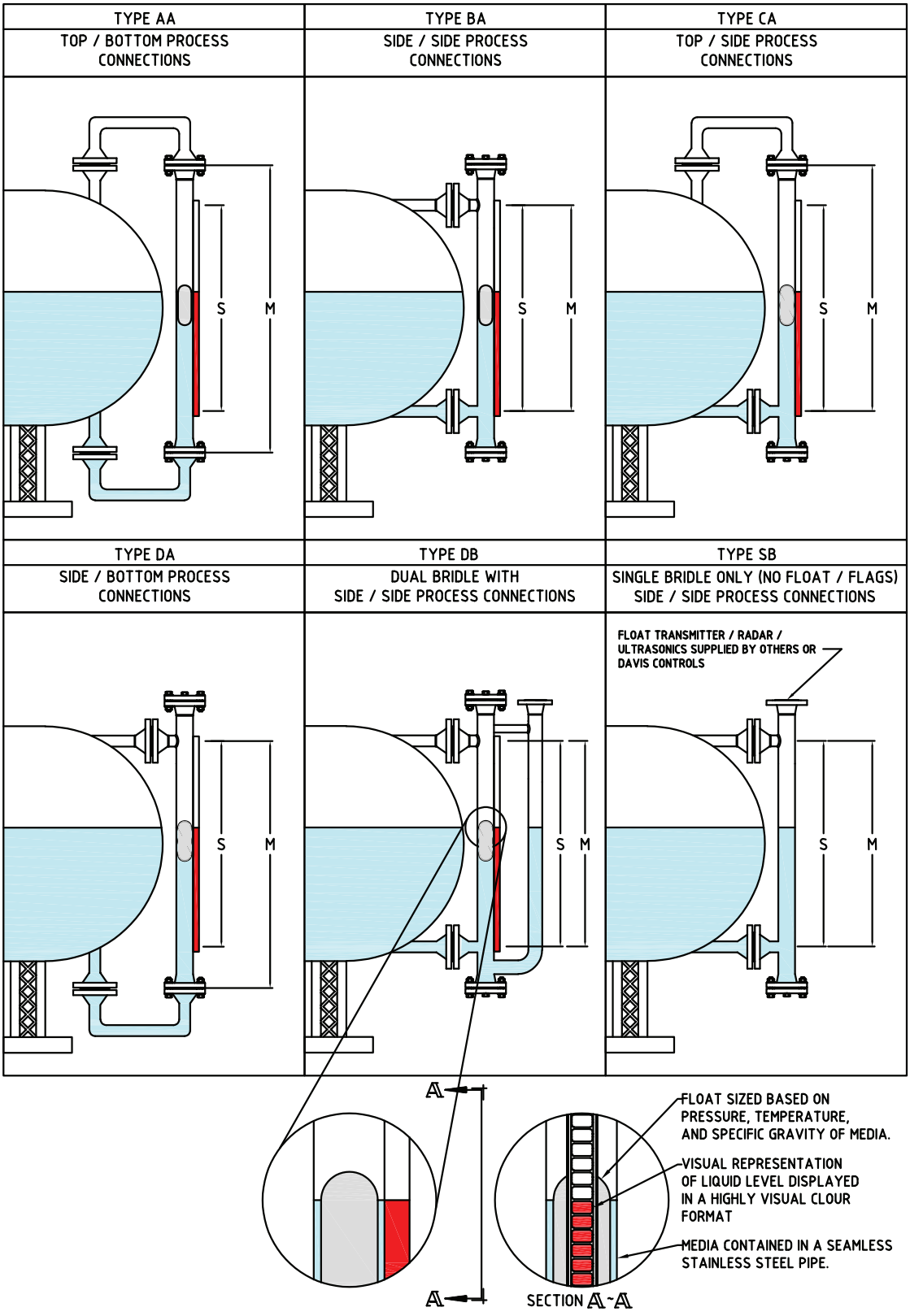
TYPE AA
TOP / BOTTOM PROCESS CONNECTIONS
TYPE BA
SIDE / SIDE PROCESS CONNECTIONS
TYPE CA
TOP / SIDE PROCESS CONNECTIONS
S
M
TYPE DA
SIDE / BOTTOM PROCESS CONNECTIONS
TYPE DB
DUAL BRIDLE WITH SIDE / SIDE PROCESS CONNECTIONS
TYPE SB
SINGLE BRIDLE ONLY (NO FLOAT / FLAGS) SIDE / SIDE PROCESS CONNECTIONS
FLOAT TRANSMITTER / RADAR / ULTRASONICS SUPPLIED BY OTHERS OR DAVIS CONTROLS
A
A
SECTION A-A
FLOAT SIZED BASED ON PRESSURE, TEMPERATURE, AND SPECIFIC GRAVITY OF MEDIA.
VISUAL REPRESENTATION OF LIQUID LEVEL DISPLAYED IN A HIGHLY VISUAL CLOUR FORMAT
MEDIA CONTAINED IN A SEAMLESS STAINLESS STEEL PIPE.

Davis Controls®
A breed above the rest

Magnetic Level Gauge

Accurate, Affordable, Adaptable and Reliable

MAGNETIC LEVEL GAUGE ORDER INFORMATION SPECIFICATION

Client Information

Company Name:		
First Name:	Last Name:	
Street Address:		
Street Address 2:		
City:	Prov/State:	Postal/Zip:
Phone Number:	Cell Number:	
Email:		
Reference:		

Gauge Information

Fluid Description:	Fluid SG(s):
Interface required:	Quantity of Gauges:
Max. Operating Pressure:	Max: Operating Temperature:
Center to Center Length “M”:	Visible Length “S”:
Vessel Connections:	Size & Rating:
Vessel Material:	Mounting Configurations:
	If other, please specify:

Accessories

Transmitter 4-20 mA:	Graduated Scale Measuring Units:
Point Level Switches/Alarms required:	If other, please specify
If yes, enter QTY:	Insulated Jacket required:
Additional Notes:	Please send completed form to info@daviscontrols.com

Davis Controls®
A breed above the rest

Magnetic Level Gauge Switches

Accurate, Affordable, Adaptable and Reliable

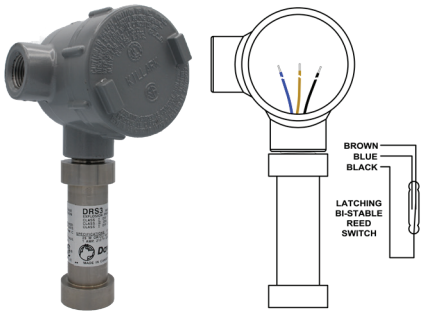

DRS3

Low Power Singe Pole Reed

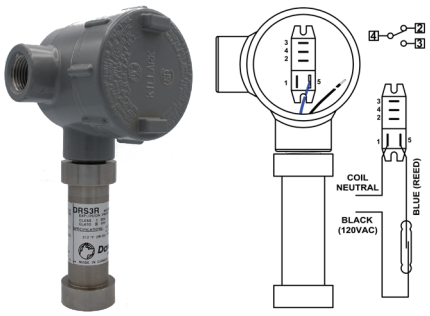

DRS3R

High Power Single Pole Relay

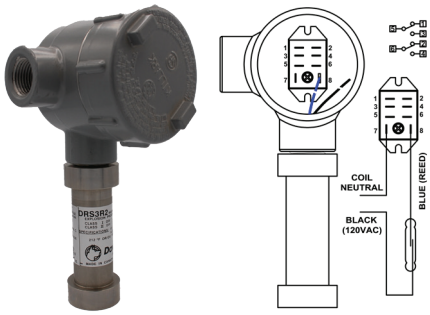

DRS3R2

High Power Double Pole Relay

EXPLOSION PROOF

DRS3	DRS3R	DRS3R2
CSA (NRTL) APPROVED FOR HAZARDOUS LOCATIONS	CSA (NRTL) APPROVED FOR HAZARDOUS LOCATIONS	CSA (NRTL) APPROVED FOR HAZARDOUS LOCATIONS
CLASS 1 DIVISION 1 GROUP C & D	CLASS 1 DIVISION 1 GROUP C & D	CLASS 1 DIVISION 1 GROUP C & D
CLASS 2 DIVISION 1 GROUP D E, F & G	CLASS 2 DIVISION 1 GROUP E, F & G	CLASS 2 DIVISION 1 GROUP E, F & G
CLASS 1 DIVISION 2 GROUP A, B, C & D		

ELECTRICAL RATING

DRS3		DRS3R		DRS3R2	
Voltage:	120 VAC MAX	**Voltage:**	120 VAC MAX	**Voltage:**	120 VAC MAX
Switching Power:	25 WATTS OR VA MAX. A Snubber or suppressor must be used across all inductive loads (Relays)	**Switching Current:**	10 AMPS MAX (Relay Contacts)	**Switching Power:**	10 AMPS MAX (Relay Contacts)
Temperature: (see note 1)	-40 to 125°C MAX -40 to 257°F MAX	**Temperature: (see note 1)**	-40 to 125°C MAX -40 to 257°F MAX	**Temperature: (see note 1)**	-40 to 125°C MAX -40 to 257°F MAX

TERMINALS

DRS3		DRS3R		DRS3R2			
BLACK	COMMON (LIVE IN)	**1**	NEUTRAL IN (TO ONE SIDE OF COIL)	**1**	SWITCHED OUT POLE 1	**6**	POLE 2 OUT COMM
BLUE	MAKES WITH BLACK ON FLOAT ASCENT	**2**	SWITCHED OUT	**2**	SWITCHED OUT POLE 2	**7**	COIL IN NEUTRAL
BROWN	MAKES WITH BLACK ON FLOAT DESCENT	**3**	SWITCHED OUT	**3**	SWITCHED OUT POLE 1	**8**	COIL (INTERNAL CONNECTION TO BLUE WIRE) BLACK WIRE LIVE 120V IN
		4	LIVE IN (RELAY COM & INTERNAL BLACK WIRE)	**4**	SWITCHED OUT POLE 2		
		5	COIL (INTERNAL CONNECTION TO BLUE WIRE)	**5**	POLE 1 OUT COMM		

Note: 1. Higher temperatures can be achieved by using layers of micro-therm insulation.

Davis Controls®
A breed above the rest

Magnetostrictive Level Transmitter

Accurate, Affordable, Adaptable and Reliable

MAGNETOSTRICTIVE LIQUID LEVEL SENSORS consists of a stem, sensor head and a float that travels through the level chamber. The float contains a permanent magnet and the stem houses a wire waveguide. The level head generates electrical pulses which travel through the vertical wiring within the waveguide or sensor tube. These fixed pulses generate a magnetic field around the wire, which interacts with the float inside the process chamber.



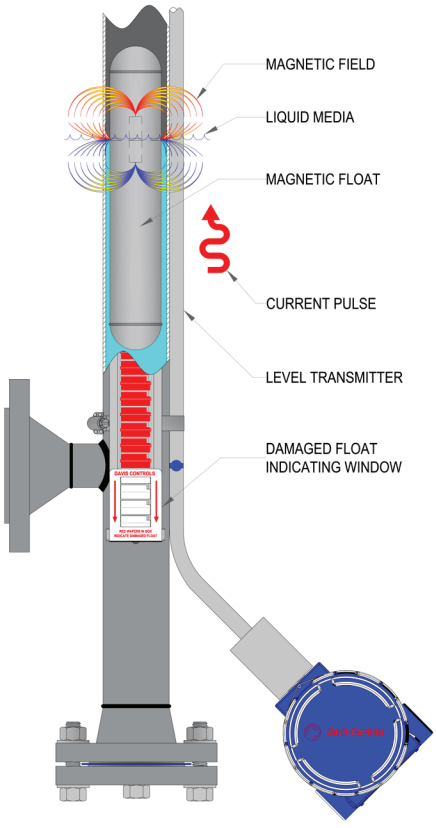

THE WAVEGUIDE is constructed of a metal with ferromagnetic properties, making it possible to measure the float position. As a result, the molecules in the metal waveguide line up with magnetic fields. A magnetostrictive level transmitter uses two magnetic fields to align the molecules in different directions to create a detectable point on the wire waveguide. The waveguide is magnetized by an electrical pulse that passes across it, aligning the molecules in one direction. Molecules aligned in a different direction by the pulse's contact with the float's competing magnetic field cause a vibration to return to the sensor housing at a defined speed. This vibration is known as a strain pulse. By measuring the time delay between the initial electrical pulse and resulting strain pulse, the distance to the float can be determined with a high degree of accuracy.

Features

- Explosion Proof - Class I Division 1 & 2 Groups C & D, Class I Zone 1, Class I Zone 2
- Highly accurate and repeatable readings
- 4-20mA, RS-486 (Modbus RTU) output *
- Rugged and reliable, lengths up to 12.74 feet (3.9 m)
- Reverse polarity protection

*** Contact Davis Controls Ltd at info@daviscontrols.com for HART communication**

Davis Controls®
A breed above the rest

Magnetostrictive Level Transmitter

Accurate, Affordable, Adaptable and Reliable

Resolution:	4-20 mA: 14 bit DAC (1 mm) Modbus: 0.04 in (1 mm)	**Distance Accuracy:**	4-20 mA, Modbus: Greater of ±0.05% of FS or 1 mm
Programming:	RS-485: optional RST-6001 USB to RS-485 converter 4-20 mA: factory set or optional RST-4100 programming module	**Probe Operation Temperature:**	-40° - 85°C (-40° - 185°F) Optional: Up to 148.8°C (300°F) using microtherm
Enclosure:	IP65	**Housing:**	Cast aluminum, epoxy coated
Stem:	0.5” ø 316L SS	**Stem Length:**	1 - 12.74 ft (0.3 - 3.9 m)
Electrical Connection:	Terminal Block, 12-24 VDC	**Typical Current Draw:**	4-20 mA: (single) 4-22 mA, Modbus (RS-485): 25 mA
Output:	Single or dual loop-powered 4-20 mA	**Set Points:**	RS-485: optional RST-6001 USB to RS-485 converter 4-20 mA: factory set or optional RST-4100 programming module

CALIBRATION

Zero Adjust Range:	Anywhere within the active length
Span Adjust Range	FS = 0.5 ft from Zero
Electronics Orientation	Top or bottom options available

FIELD INSTALLATION

Transmitter Length:	Up to 12.74 ft (3.9 m)
Size (Electronics Enclosure)	Call for details
Wiring	2-wire connection shielded cable or twisted pair to screw terminals through a conduit opening.

ENVIRONMENTAL

Sealing	Potted sensor cartridge, electronics conformally coated	**Humidity**	1 to 100% R.H.
Electronic Operating Temp.	-34 to 71°C (-30 to 160°F)	**Materials**	Contact Davis Controls for insertion type level device 316 Stainless Steel standard. Optional, other material available.

AGENCY APPROVALS

CANADIAN STANDARDS (cCSAus)

Rated 12-24 VDC; 4-20 mA Ta 85°C Class I, Division 1 & 2 Groups C & D T4	Ex d IIB T4 Ex nA IIB T4 Class I, Zone 1; AEx d IIB T4 Class I, Zone 2; AEx nA IIB T4

C SA® US

All specifications are subject to change without notice.
Consult Davis Controls Ltd. for verification of specifications critical to your needs.

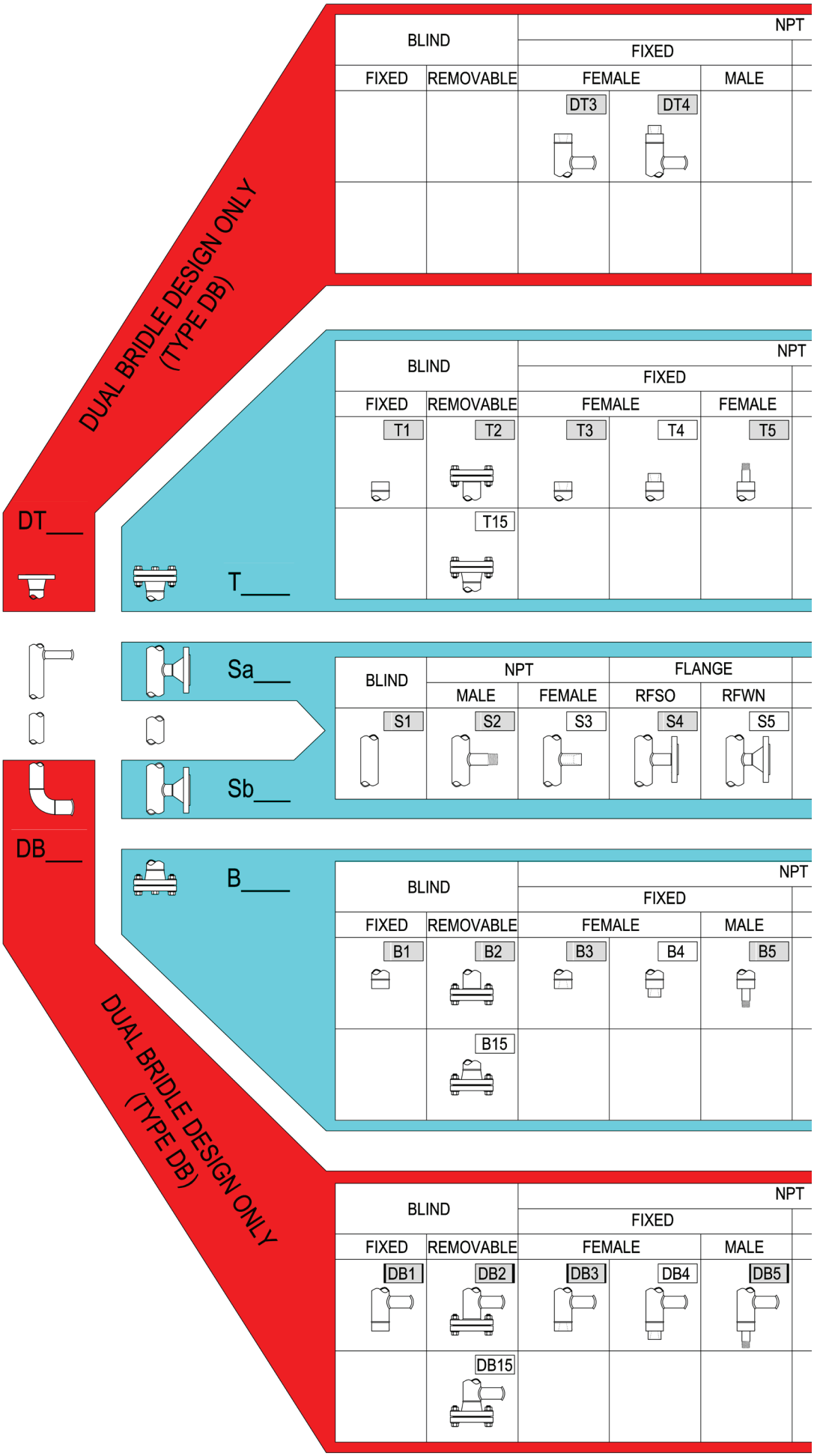
DUAL BRIDLE DESIGN ONLY
(TYPE DB)
DT___
BLIND
NPT
FIXED
FIXED
REMOVABLE
FEMALE
MALE
DT3
DT4
T___
T1
T2
T3
T4
T5
T15
FEMALE
Sa___
Sb___
BLIND
NPT
FLANGE
MALE
FEMALE
RFSO
RFWN
S1
S2
S3
S4
S5
DB___
B___
B1
B2
B3
B4
B5
B15
DUAL BRIDLE DESIGN ONLY
(TYPE DB)
DB1
DB2
DB3
DB4
DB5
DB15

REMOVABLE			FLANGE		WELD			
					FIXED		REMOVABLE	
FEMALE		MALE	FIXED	REMOVABLE	SOCKET	BUTT	SOCKET	BUTT
DT6	DT7		DT9	DT10				
DT16	DT17			DT19				

REMOVABLE			FLANGE		WELD			
					FIXED		REMOVABLE	
FEMALE		MALE	FIXED	REMOVABLE	SOCKET	BUTT	SOCKET	BUTT
T6	T7	T8	T9	T10	T11	T12	T13	T14
T16	T17	T18		T19			T20	T21

WELD	
SOCKET	BUTT
S6	S7

Sa & Sb (Sides)

S1. No connection
S2. NPT (MALE) nipple
S3. NPT (FEMALE) coupling
S4. ANSI flange
S5. Weldneck flange
S6. Socketweld coupling
S7. Buttweld nipple

NOTE: Connection codes background shaded grey are most common types.

SELECT BLUE SECTION ONLY FOR A SINGLE BRIDLE DESIGN

SELECT RED AND BLUE SECTION ONLY FOR A DUAL BRIDLE DESIGN

REMOVABLE			FLANGE		WELD			
					FIXED		REMOVABLE	
FEMALE		MALE	FIXED	REMOVABLE	SOCKET	BUTT	SOCKET	BUTT
B6	B7	B8	B9	B10	B11	B12	B13	B14
B16	B17	B18		B19			B20	B21

REMOVABLE			FLANGE		WELD			
					FIXED		REMOVABLE	
FEMALE		MALE	FIXED	REMOVABLE	SOCKET	BUTT	SOCKET	BUTT
DB6	DB7	DB8	DB9	DB10	DB11	DB12	DB13	DB14
DB16	DB17	DB18		DB19		DB22	DB20	DB21



OAKVILLE - HEAD OFFICE
2200 Bristol Circle
Oakville, ON L6H 5R3
Tel: 905-829-2000
Fax: 905-829-2630
Email: info@daviscontrols.com

MONTREAL
302 - 6700 ch. Cote de Liesse
Saint-Laurent, QC H4T 2B5
Tel: 514-737-4817
Fax: 514-737-9948
Email: infomtl@daviscontrols.com

WINNIPEG
Tel: 204-253-2815
Email: info@daviscontrols.com

VANCOUVER
Tel: 604-298-9101
Email: info@daviscontrols.com

CALGARY
Tel: 403-255-5035
Email: info@daviscontrols.com

ATLANTIC
Tel: 902-755-1831
Email: info@daviscontrols.com